CEMENT MIXER



Foot option also available.

Cement Mixer

The Digga Cement Mixer can mix anything from cement to fertilizer, it fits quickly and easily to your Digga Planetary Auger Drive.

(Auger Drive sold separately)

Features:

- Easy Connection: Simply pin cradle to exsisting auger frame and add mixer bowl. Change from drilling to mixing in under 2 minutes.
- Cement mixing attachment to suits Digga auger drives and frames only. Also available for mini machines.
- Maintenance free.
- Manufactured from quality materials.

Ideal Use:

Mixing cement, mulch, animal feed, fertilizer.

Machine Suitability:

Skid Steer Loaders, Mini Loaders and Tele-Handlers.

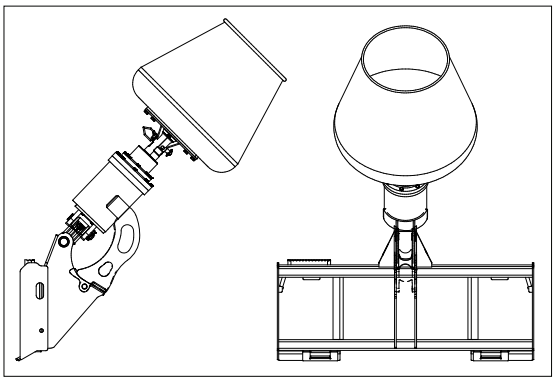

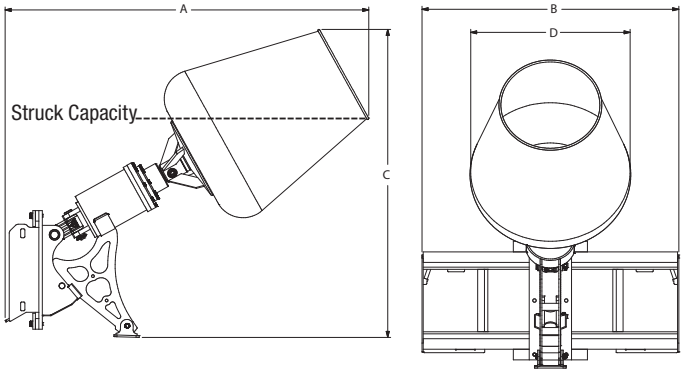

Specifications	Small	Large
Total Capacity ^	3.9 Cu ft / 110 L	5.7 Cu ft / 160 L
Struck Capacity *	2.5 Cu ft / 69 L	4 Cu ft / 115 L
Length (A)	1202 mm	1269 mm
Width (B)	1212 mm	1212 mm
Height (C)	1324 mm	1391 mm
Width (D) Bowl Only	610 mm	710 mm
Weight Complete with PD3 & Frame	158 kg	173 kg
Weight (Bowl & Cradle Only)	38 kg	53 kg

(*) Maximum struck capacity is measured at an angle of 45 degrees. See above diagram.

(^) An upright position depicts total capacity.

v1.01