PROFILER
SP300 STANDARD FLOW



PROFILER

The Digga Profiler is perfect for planing (mill) rock, concrete and asphalt.

Features:

- Digga Planetary drive delivers high torque.
- All purpose picks for use on both asphalt and concrete.
- Independent self-leveling depth adjustment plates which allow for precise lapping cuts and taper cuts.
- Manual depth and tilt options available.
- Convenient ergonomic electro-hydraulic control joystick for depth, tilt and side shift (Optional).
- Water nozzle kit for dust suppression supplied as standard.
- Solid hardened steel wheels with greaseable manifold pins and secluded greased zerks.
- 300mm Standard Drum.
- 1 year limited warranty.

Machine suitability:

Skid Steer Loaders.

Ideal Use

Plane (mill) rock, concrete and asphalt.

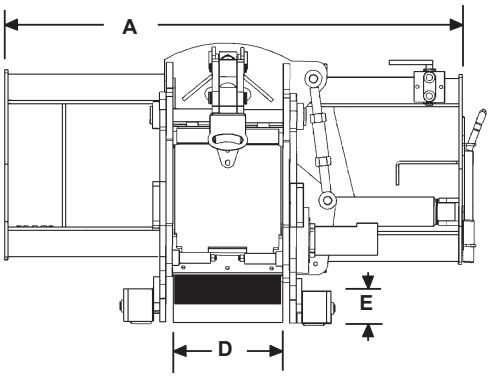

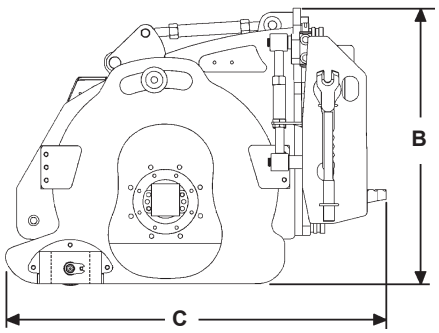

Specifications	SP300
A Width (overall)	1320 mm
B Height (overall)	816 mm
C Length (overall)	1110 mm
D Planing Width	305 mm
E Planing Depth	0 - 127 mm
Drum Diameter	482 mm
Number of picks (Std Drum)	37
Weight	680 kgs
Hydraulic Flow Required	45 - 84 LPM
HP Range	25 - 33 HP
Operating Pressure (BAR)	170 - 240
Tilt	11°
Side Shift (centre to right)	0 mm - 482 mm

v1.01