BIGFOOT, HYDRIVE & MINI BIGFOOT TRENCHERS

Operator's Manual

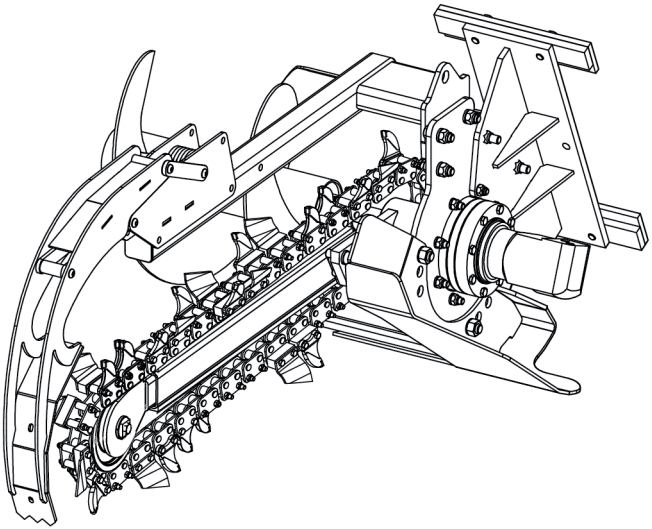

MY.DIGGA.COM

SCAN THIS QR CODE

ACCESS OPERATOR MANUALS
RISK ASSESMENTS AND MORE

Original Manual

PM-000252

MY.DIGGA.COM

SCAN THIS

QR CODE

DECAL APPLIED TO THE ATTACHMENT

MY.DIGGA.COM

SCAN THIS

QR CODE

DECAL TO BE APPLIED TO HOST MACHINE CAB

ACCESS OPERATOR'S MANUALS, RISK ASSESMENTS AND MORE

The following criteria would have been taken into account by Digga or your Digga dealer prior to supplying you with your Trencher. If you have purchased your Trencher from someone other than Digga, be sure to check the following criteria to ensure efficient trenching. The parent machine needs to meet the requirements of the trencher in terms of mass, hydraulic flow and pressure.

CRITERIA	EFFECT
Flow	Flow to the trencher affects the speed of the chain. Excessive flow will damage the motor.
Pressure	Pressure to the trencher affects torque of the trencher. Excessive pressure will damage the motor.
Ground Conditions	Ground conditions affect the speed and efficiency at which you can trench.
Chain Type	There are different chains available for different soil conditions, having the incorrect chain type for the ground condition will affect the efficiency of the trencher operation and the wear life of the chain.
Parent Machine Weight	Parent machine weight affects the stability of the trencher and machine as a unit, which will in turn affect the efficiency of the trenching operation.

1 Table of Contents

1	Table of Contents	4
2	Critical Information - Service Intervals	5
3	To the Purchaser	6
4	Service and Preparation for Use	7
5	Safety Precautions - General Information	12
6	Safety - Working with the Attachment	19
7	Safety - Decal Labels	21
8	Safety - Decal Label Location	24
9	Installation and Operating Instructions	27
10	Maintenance	37
11	Troubleshooting	50
12	Spare Parts	51
13	Notes: Operator’s Manual	52
	Warranty Statement	53

NOTE

Do not connect or operate your Trencher without first having read and understood the following statement.

Your Digga Trencher is a high performance attachment, fitted with a Digga planetary gearbox, that is designed for trenching. To avoid premature wear and failure, and to fulfil your terms of warranty please read this statement. **Your Digga Trencher gearbox must have a first oil change within the first 30 hours of extreme use or 50 hours of moderate use or 3 months of use (whichever comes first) to ensure the bed in of the gearbox.** For details, please read the maintenance section of this manual.

If the first oil change is not performed within this period, excessive wear within the gearbox can occur that will cause premature failure. All warranty will be voided.

Oil must then be changed thereafter every 300 hours (extreme use) and 500 hours (moderate use) and a full service every 12 months must be performed by an authorised service agent to ensure Warranty requirements are met.

In the event of a failure under the warranty period:

- Contact Digga immediately, do-not disassemble your Trencher without first obtaining written permission and instructions from Digga.
- Proof of service must be provided in hard copy form of both operational and service history records (including serial number of gearbox and hydraulic motor). Service must be performed by an authorised Digga service agent.

3 To the Purchaser

Thank you and Congratulations on the purchase of your new Digga product!

This product was carefully designed and manufactured to give you many years of dependable service. It is mandatory that oil changes are performed at the specified interval to keep it in top working condition (for details see the maintenance section of this manual).

Before First Use

- Inspect the attachment for any shipping damage. If the damage does exist, do not operate until the damaged parts have been replaced or repaired.
- Confirm chain speed is correct for application.
- Confirm machine capacity is suitable for use with a trencher (lift capacity, hydraulic flow, and hydraulic pressure).
- Check chain tension.
- Check crumber has not been damaged in transit and is not contacting the chain.
- Check slide frame is in correct position (ideally trencher should be centred on host machine).
- Check slide frame secure clamping bolts are tight.
- Check nose roller is turning (do this by rotating the chain slowly).

Service

Use only manufacturer replacement parts. Substitute parts may not meet the required standards.

CAUTION

Never allow anyone to operate this attachment without reading the “Safety precautions” and “Operating instructions” sections of this manual. Always choose hard and level ground to park the vehicle on and set the brake, so the unit cannot roll.

4 Service and Preparation for Use

MODELS COVERED IN THIS MANUAL				
BIGFOOT	BIGFOOT XD	HYDRIVE	HYDRIVE XD	MINI TRENCHERS

All Digga Trenchers are designed and manufactured to give dependable service. Except for general cleaning of the attachment, all service for warranty and assessment for warranty must be performed by an authorised Digga service agent. Substitute parts will not meet the standards required for safe and dependable operation. Use of non genuine Digga parts will void warranty and Digga will accept no liability whatsoever for consequential damages. For details contact your local Digga dealer. To facilitate warranty or service, record the model and serial number of your unit in the space provided on this page. This information may be obtained from the identification plate located on the product.

Trencher equipment options are available to help you do a better job in special conditions. These options include chains, wear parts, crumber bar, spare parts, and different width chains. These are noted throughout this manual and can be purchased from your Digga dealer.

Model:_____

Serial Number:_____

Purchase Date:_____

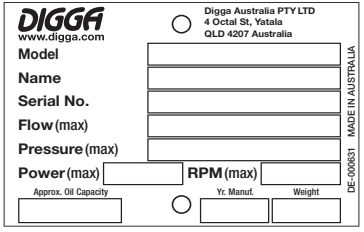

AUS & NZ

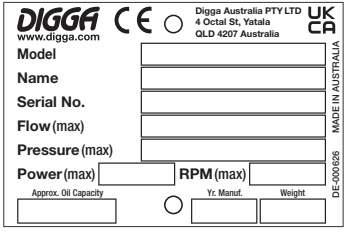

EU & UK

NOTE

The parts department needs this information to ensure accurate parts can be sent to the authorised service agent.

4 Service and Preparation for Use

To avoid any inconvenience before operation, please check that you have received the following items which you may have ordered.

BIGFOOT & HYDRIVE TRENCHER

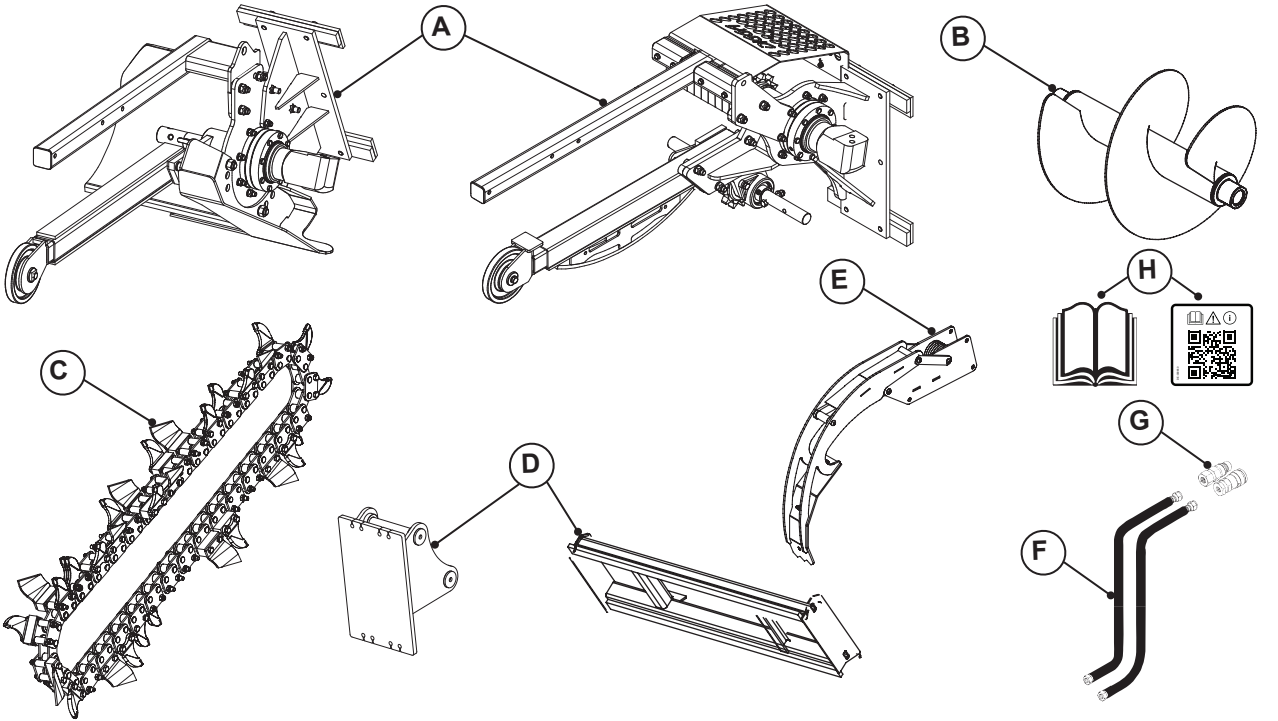

SERIAL NO.	DESCRIPTION	QUANTITY
A	Complete trencher with Digga boom & danger bar. (Mini Bigfoot or Bigfoot or Bigfoot XD or Hydrive or Hydrive XD)	01
B	Spoil Auger.	01
C	Digging chain of your choice.	01
D	Frame/Excavator hitch.	01
E	Crumber bar.	01
F	Hydraulic hose kit.	Set
G	Quick release couplers.	Set
H	Operator's Manual or QR Decal (applied to Trencher).	01

The Digga Trencher receives its power from the parent machine through the Auxiliary Valve Circuit with Quick release couplers normally located on the machine arms near the front. Attaching points on the Trencher are the same as the bucket attaching points on your machine. Assemble the Trencher if required and hook up hoses to auxiliary hydraulics.

Engine must be shut off. Check that the chain rotation on the Trencher is anti-clockwise when viewed from the Motor side of the Trencher. Please note that two way flow is required for anti-clockwise rotation. To assure optimum motor life, run hydraulic motor for one hour on approximately 1/3 RPM before application of full load. Ensure your machine flow and pressures do not exceed the maximum rated flow and pressures of the Trencher.

NOTE

This operator's manual provides measurements in both International System of units (SI) and United States customary system units (USCS).

4 Service and Preparation for Use

To avoid any inconvenience before operation, please check that you have received the following items which you may have ordered.

MINI TRENCHER

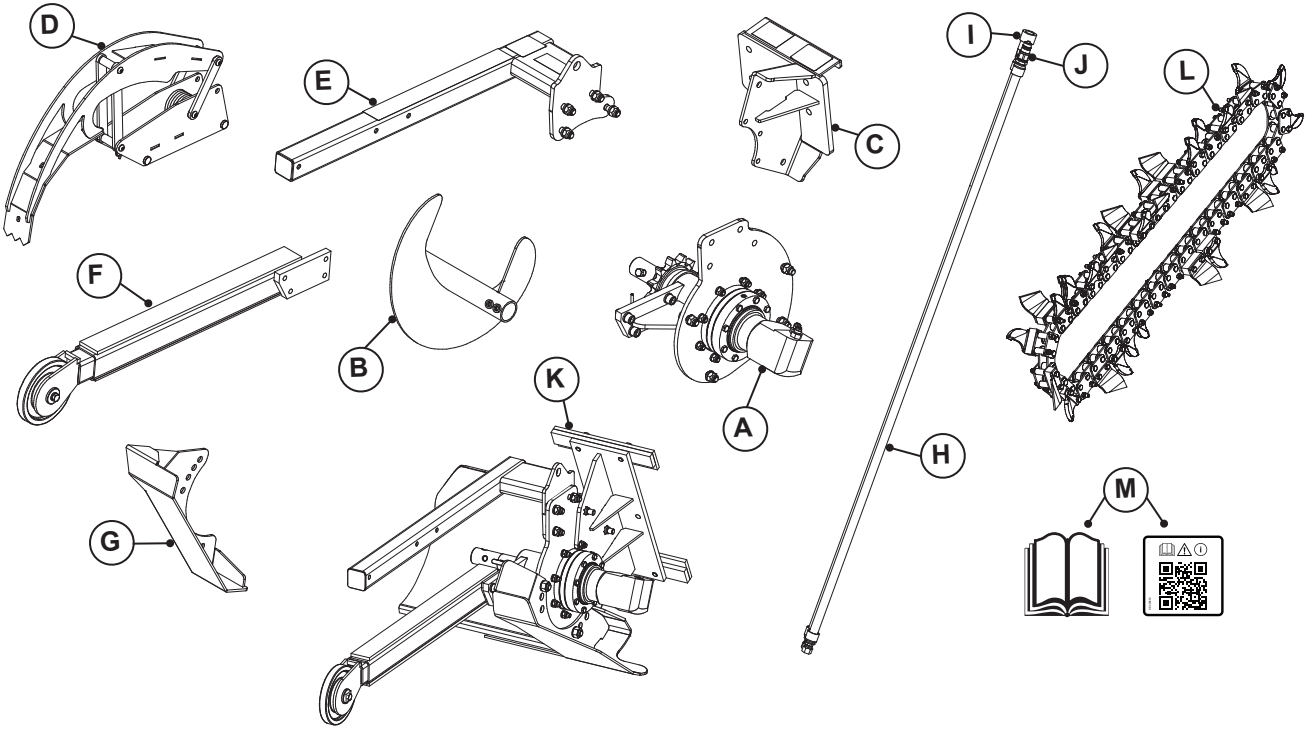

SERIAL. NO	DESCRIPTION	QUANTITY
A	Gear box and motor assembly.	01
B	Spoil auger.	01
C	Hitch plate-sliding side shift.	01
D	Crumber bar.	01
E	Danger bar.	01
F	Outer boom.	01
G	Adjustable skid foot.	01
H	Hydraulic hoses.	02
I	Female coupler.	01
J	Male coupler.	01
K	Trencher sub-assembly (Mini Bigfoot / Bigfoot) with optional side shift frame.	01
L	Digging chain of your choice.	01
M	Operator's Manual or QR Decal (applied to Trencher).	01

NOTE

This operator's manual provides measurements in both International System of units (SI) and United States customary system units (USCS).

5 Safety Precautions - General Information

You must understand all safety statements shown on your attachment (Trencher) and in this manual. Especially note the information called out by the designations shown below and follow these safety precautions, when operating or maintaining the Trencher.

DANGER

The DANGER designation indicates an imminently hazardous situation that, if not avoided, will result in death.

WARNING

The WARNING designation indicates a potentially hazardous situation that, if not avoided, could result in death or serious injury.

CAUTION

The CAUTION designation indicates a potentially hazardous situation that, if not avoided, could result in minor or moderate injury or property damage.

NOTE

You will also see information called out with the NOTE designation. This additional safety or general information is important to the maintenance and operation of your loader.

During day-to-day operation of your attachment, you will encounter a variety of situations beyond those listed in this manual. We encourage you to assess the risk present at any job site and in every work task before beginning work. Apply appropriate risk mitigation strategies to make safety a first priority at all times, and if these are not sufficient, stop the job and immediately seek the help of a qualified safety consultant.

Dial Before You Dig

- Never begin work at a new location until the work area has been fully marked for underground utilities. Buried electrical, telephone, cable wires, gas, water and sewer lines are likely to be present. Unintentionally disrupting these hidden hazards while working with your loader can result dangerous situations and property damage.
- Many countries offer a “dial before you dig” service which advises the location of underground services in your area. If available also use this service prior to digging, drilling, trenching or any form of excavating and earthmoving.

CAUTION

You must ensure that underground utilities have been officially marked before working in the area. Markings must be valid according to state law or practice.

Exposure To Respirable Crystalline Silica Dust Along with Other Hazardous Dusts

- It is recommended to use dust suppression, dust collection and if necessary personal protective equipment during the operation of any attachment that may cause high levels of dust.

Remove Paint Before Welding or Heating

- Hazardous fumes/dust can be generated when paint is heated by welding, soldering or using a torch. Do all work outside or in a well ventilated area and dispose of paint and solvent properly.
- Remove paint before welding or heating. When sanding or grinding paint, avoid breathing the dust. Wear an approved respirator. If you use solvent or paint stripper, remove stripper with soap and water before welding. Remove solvent or paint stripper containers and other flammable material from area. Allow fumes to disperse at least 15 minutes before welding or heating.

5 Safety Precautions - General Information

End of Life Disposal

- At the completion of the useful life of the unit, drain all fluids and dismantle by separating the different materials (rubber, steel, and plastic etc.). Follow all federal, state and local regulations for recycling and disposal of the fluid and components.

Operating the Trencher

- The primary responsibility for safety with this equipment falls to the operator. Make sure that the equipment is operated only by trained individuals, who have read and understood this manual.
- An operator must not use drugs or alcohol, which can change his or her alertness or coordination. An operator taking prescription or over-the-counter drugs should seek medical advice on whether or not he or she can safely operate equipment.
- Do not hurry the learning process or take the unit for granted.
- It is the skill, care, common sense, and good judgement of the operator that will determine how efficiently and safely the job is performed.
- Visually inspect your equipment, ensure correct assembly and installation is done and never operate the equipment that is not in proper working order.
- Know the capabilities of your equipment and practice its operation to become familiar with the controls, emergency shut down procedures, and the way it handles on your machine.
- Follow all safety decals and keep them clean. Replace them, if they become worn, damaged or illegible.
- Do not paint over, remove or deface any safety signs or warning decals on your equipment.
- Operate only from the operator’s station and operate only in daylight or with sufficient artificial light.
- Always carry loads close to the ground and do not exit the machine with the loader arms raised.
- Do not exceed rated operating capacity (ROC) of the host machine, as machine may become unstable resulting in loss of control. Overloading or exceeding the manufacturers specifications will also void all warranty.

Operating the Trencher (Continued)

- Never use the attachment on a machine that is not equipped with a cab rollover protective structure (ROPS) and/or falling object protective structure (FOPS), and operator restraints (seat belts or equivalent devices). This does not apply to mini Stand-on Loaders.
- Establish and maintain a minimum 6 meters (20 feet) exclusion zone around the working area. No person other than the operator should enter the work zone, while the parent machine's engine is running.
- Do not allow site workers to climb or ride on Trencher at any time, including while stationary, in operation or being moved. Operate only from the operator's station.
- Avoid steep hillside operation which could cause the machine to overturn. Consult your machine operator and safety manual for maximum incline allowable.
- Reduce speed when driving over rough terrain, on a slope or turning to avoid overturning the machine.
- Travel only with the trencher in a safe transport position to prevent uncontrolled movement. Drive slowly over rough ground and on slopes.
- Remove the trencher from the prime mover before transporting to and from the job site.
- Do not drive close to ditches and excavations, etc., cave in could result.
- Flow and pressure gauges, fittings, and hoses must have a continuous operating pressure rating of at least 25% higher than the highest pressures of the system.
- Do not smoke when refuelling the prime mover. Allow room in the fuel tank for expansion. Wipe up any spilled fuel and secure cap tightly when done.
- All trenching operations must be stopped in the event of local thunderstorm or lightning activity. During operation, weather conditions shall be monitored, operations shall cease during electrical storms or when electrical storms are imminent.
- Trenchers shall be used only for their designed intent and shall not be loaded beyond their rated capacity. Overloading or exceeding the manufacturers specifications will void all warranty.
- The trencher must be stopped before making adjustments to the attachment.

Operating the Trencher (Continued)

- Before exiting the machine, lower the attachment to the ground, apply the parking brakes, turn off the prime mover's engine, and remove the key.
- A trench that is left for prolonged periods of time must be capped and flagged, so it is clearly identified on the work site.

Ground Personnel and Bystanders

- Be alert to others in the work area. Be sure others know when and where you will be working.
- Loose fitting clothing, long hair, jewellery and equipment which might become entangled in moving equipment are prohibited while working near the Trencher.
- Operators, helpers, and other personnel working near Trencher must wear steel-toe safety shoes, safety glasses, and hard hats as a minimum. Hearing protection, respirators, and personal protective clothing will be specified in the site-specific Health and Safety Plan.

Storing the Trencher

- Seal hydraulic couplers from contaminants and secure all hydraulic hoses off the ground to help prevent damage.
- Clean the unit thoroughly, removing all mud, dirt, and grease.
- Inspect for visible signs of wear, breakage, or damage. Order any parts required and make the necessary repairs to avoid delays upon removal from storage.
- Coat liberally with grease the output shaft and collar, extension shaft and collar, and all connecting pins to prevent rust and reduce wear.
- Tighten loose nuts, cap screws and hydraulic connections.
- Replace decals that are damaged or in unreadable condition.
- Store unit in a dry and protected place, as leaving the unit outside will materially shorten its life.

Maintaining the Trencher

- All maintenance should be performed with host machine's engine turned off, parking brakes applied,machine arms lowered, and hydraulic pressure relieved.
- If lift arms must be left raised for any reason, use a positive lift arm lock to secure the arms in place. Serious damage or personal injury could result from lift arms accidentally lowering.
- Never adjust a relief valve for pressure higher than recommended by the host machine manufacturer.

Transporting the Trencher

- When transporting your attachment, follow all local government regulations that may apply along with any equipment safety precautions provided in this manual.
- It is the responsibility of the operator that safe systems of work are employed while handling this attachment.
- No tie down points are provided on the attachment and its the responsibility of the operator to ensure that the attachment is firmly fastened without causing any damage to it.
- Attachment should be well secured, when being moved or in transit and furthermore prior to moving, storing, loading/unloading,or parking.
- Verify that all tie down accessories (chains, slings, ropes, and shackles etc.) are capable of maintaining attachment stability during transporting and are attached in such a way to prevent unintended disengagement or shifting of the unit.
- Use extra care when loading or unloading the attachment on to a trailer or truck and disconnect hydraulic couplers from the host machine during the transportation. No responsibility for loss or damage to persons or property in any regard can be attributed to Digga.

DANGER

During Trencher operation, maintain a minimum “no-work zone” buffer of 3 meters (10 feet) from any overhead electrical service and 2 meters (6 feet) from any underground service .

5 Safety Precautions - General Information

Complete a Risk Assessment

Your Digga Trencher is a versatile earthmoving machinery attachment, capable of performing its tasks in a safe and effective manner. To ensure the safety of operators and others, it is important to document the work at hand for hazard and risk. Before beginning work, complete a risk assessment. The following steps provide a framework for this activity:

1	DOCUMENT THE ACTIVITY Assemble those involved in the activity. Write down the tasks required for the activity in step-by-step form.
2	IDENTIFY THE HAZARDS Next to each task, identify what part of the task may cause injury to those engaged in the task or others in the vicinity. Rate the consequences and likelihood of the hazard using the risk assessment matrix.
3	DOCUMENT THE CONTROL MEASURES Using the results from the risk assessment matrix, determine which hazards require attention. List all mitigation measures that are required to eliminate or minimize those hazards.
4	IDENTIFY THE RESPONSIBLE PERSON Document the name of the person responsible for implementation of the mitigation measure.
5	MONITOR AND REVIEW Ensure that the activity is supervised and that the documented process is being followed.

DANGER

All bystanders should be kept at a minimum of 6 meters (20 feet) away from the working area of the Trencher.

Take Extreme Care When Dealing with Hydraulics, Whilst Assembling, Operating, Maintaining or Performing Any Work on this Product

- Hydraulic fluid under pressure can penetrate the skin and cause serious injury or death. **Hydraulic leaks under pressure may not be visible!**
- If any fluid penetrates the skin, **get immediate medical attention!**
- Wear safety glasses, protective clothing and use a piece of cardboard or wood when searching for hydraulic leaks. **Do not use your hands!**
- Before connecting or disconnecting hydraulic hoses, read your host machine or power operator's manual for detailed instructions on connecting and disconnecting hydraulic attachments.
- Ensure that all parts meet the specifications for this product when installing or replacing hydraulic hoses or fittings.
- After connecting hydraulic lines:
  - Slowly and carefully raise the loader's arm(s) and cycle the rollback / dump cylinders to check hose clearances and to check for any interference.
  - Operate the hydraulics on this product to ascertain forward and reverse.
  - Ensure that the hoses cannot interfere with or actuate the quick-attach mechanism.
  - Ensure that hoses will not be pinched, or get tangled, in any equipment.
- Do not lock the auxiliary hydraulics of your power unit in the "ON" position.
- Refer to parent machine operator's manual and this manual for procedures and intervals. After this, inspect and maintain the entire hydraulic system to ensure that the fluid remains clean, all devices function properly, and that there are no fluid leaks.

NOTE

For any additional safety information please see "Risk Management Booklet". To obtain a copy of this document please contact Digga Head Office.

6 Safety - Working with the Attachment

When Mounting this Product to Your Machine

- Refer to the operator’s manual of your host machine for any special or detailed mounting instructions regarding quick-attach mechanism.
- This product should fit onto the quick-attach frame or hitch (Excavator mount). If this product does not fit properly, contact your Digga dealer before operating.
- Never place any part of your body into the mounting plate, frame, hitch or loader holes. A slight movement of the power unit and this product could cause serious injury.
- Where "Auxiliary Cut Out or Dead Man" connections are connected or installed it is illegal to disengage, tamper with, or remove them.

When Adjusting, Servicing or Repairing this Product

- Do not make any modifications to your Trencher.
- When making repairs use only authorised Digga service agents and use only genuine Digga parts for the gearbox. For fasteners, hydraulic hoses, or hydraulic fittings, use only properly rated parts.
- Replacement parts must also have safety signs attached.

7 Safety - Decal Labels

The following section provides a glossary of safety labels found on your Digga Trencher. These labels are important ! Become familiar with the meaning and location of these decals prior to operating your attachment. These labels must be maintained and ensure that each label is clean, visible, and legible. To clean the decals use a soft cloth, water, and soap. Avoid the use of solvents, gasoline, or other harsh chemicals, as these may damage the decals. If a label has been damaged or removed, it must be replaced.

HIGH PRESSURE FLUID	ENTANGLEMENT/CRUSH HAZARD
ITEM 1 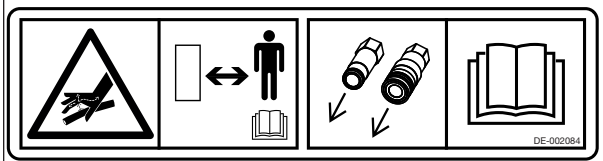 **WARNING** **This attachment operates on high pressure hydraulic fluid. Avoid fluid escaping under pressure. Read this operator's manual for more information.** **Ensure quick couplers are connected to the parent machine. Refer to this operator's manual for more information.**	**ITEM 2** **DANGER** **Keep hands and body parts clear of trencher. Keep all bystanders at a safe distance (6 meters/20 feet) from operating trencher and work zone. Refer to this operator's manual for more information.**

7 Safety - Decal Labels

SERIAL TAG	SERIAL TAG	CRUSHING HAZARD
ITEM 3 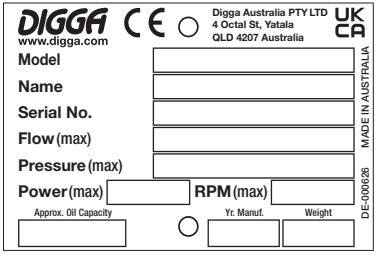 **NOTE** **Serial Tag plate contains model, serial number and technical specifications of the unit. It is to facilitate warranty, service or spare part replacement .**	**ITEM 3** 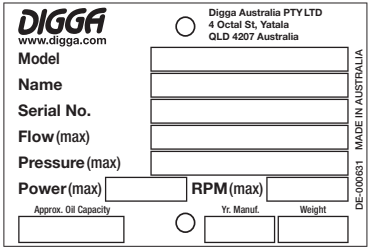 **NOTE** **Serial Tag plate contains model, serial number and technical specifications of the unit. It is to facilitate warranty, service or spare part replacement .**	**ITEM 4** **CAUTION** **Crushing hazard, feet and legs.**

NOTE

ITEM 3 - Serial Tag. This is dependant on the region.

- DE-000626 in the region that includes Europe & UK.
- DE-000631 in the region that includes Australia & New Zealand.

PROHIBITED	ATTACHMENT CONNECTIONS	ENTANGLEMENT/CRUSH HAZARD	DIAL BEFORE YOU DIG
ITEM 5	**ITEM 6**	**ITEM 7**	**ITEM 8**
		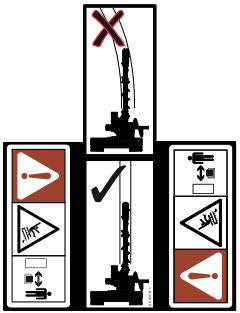	
WARNING **Do not step on Trencher. It can cause serious personal injury or damage the attachment.**	**WARNING** **Ensure locking pins on parent machine have securely engaged the attachment. Refer to this operator's manual for more information.**	**DANGER** **Keep leg or foot and other body parts clear of trencher. Keep all bystanders at a safe distance from operating trencher and work zone.** **The trencher is designed to cut straight trenches and cannot be used for cutting trenches around corners. Refer to this operator's manual for more information.**	**CAUTION** **Dial before you Dig hidden services must be located.** **NOTE** **ITEM 8 - This Decal is applicable for Australia & NZ only.** **All other regions should have a similar service available.**

NOTE

The following figure and table show typical safety decal label location. The actual position and quantity of the labels on your product may differ.

BIGFOOT TRENCHER			
ITEM	REORDER CODE		QTY
1	DE-002084		01
2	DE-002076-1		01
3 **	DE-000626	EUROPE / UK	01
	DE-000631	AUS / NZ	
4	DE-002085		01
5	DE-000054-1		01
6	DE-002107-1		01
7	DE-000167-1		01
8	DE-000046	AUS / NZ ONLY	01

Model	DECAL KIT	
	EU & UK	AUS & NZ
BFT	DKIT1066	
BFT 900 X D	DKIT1067	
BFT 1200 X D	DKIT1068	
BFT 1500 X D	DKIT1069	

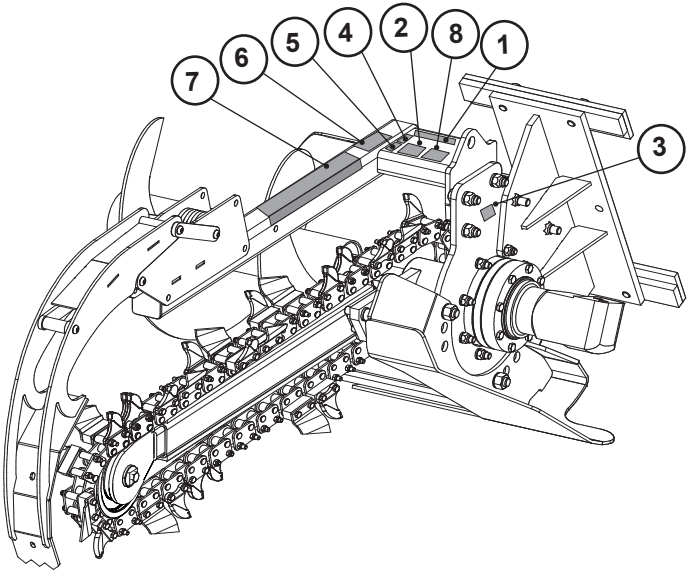

NOTE

**** The Serial Tag will either be DE-000626 or DE-000631. This is dependent on the region.**

NOTE

The following figure and table show typical safety decal labels location. The actual position and quantity of the labels on your product may differ.

HYDRIVE TRENCHER		
ITEM	REORDER CODE	QTY
1	DE-002084	01
2	DE-002076-1	01
3 **	DE-000626 EUROPE / UK	01
	DE-000631 AUS / NZ	
4	DE-002085	01
5	DE-0000541	01
6	DE-002107-1	01
7	DE-000167-1	01
8	DE-000046 Aust / NZ ONLY	01

Model	DECAL KIT	
	EU & UK	AUS & NZ
HDT HDT2	DKIT1075	

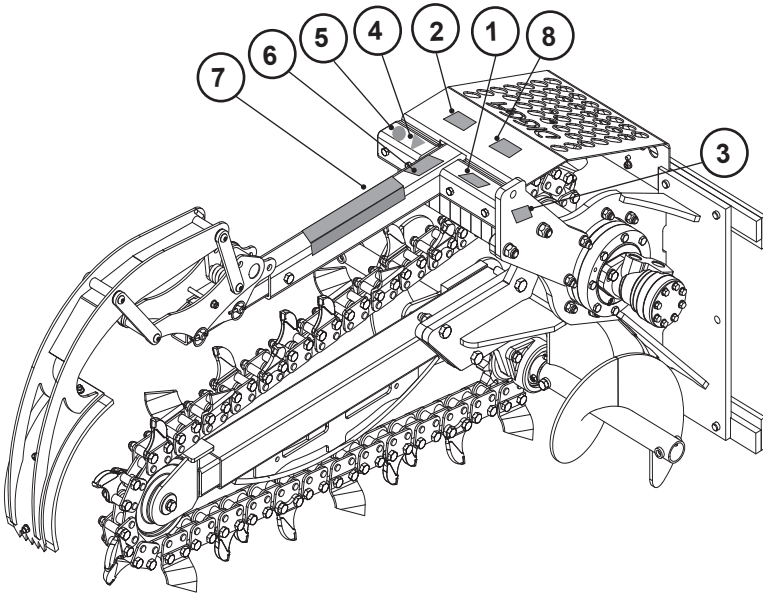

NOTE

**** The Serial Tag will either be DE-000626 or DE-000631.**
This is dependent on the region.

8 Safety - Decal Label Location

NOTE

The following figure and table show typical safety decal labels location. The actual position and quantity of the labels on your product may differ.

MINI BIGFOOT TRENCHER			
ITEM	REORDER CODE		QTY
1**	DE-000626	EU / UK	01
	DE-000631	AUS / NZ	
2	DE-002084		01
3	DE-002076-1		01
4	DE-002085		01
5	DE-000054-1		01
6	DE-002107-1		01
7	DE-000167-1		01
8	DE-000046	AUS / NZ ONLY	01

PART NO.	DECAL KIT	
	EU & UK	AUS & NZ
MLT	DKIT1065	

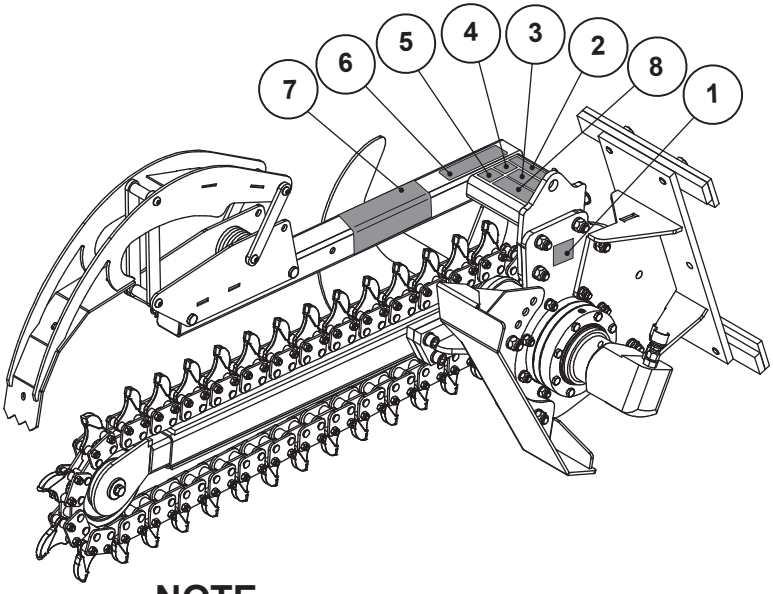

NOTE

**** The Serial Tag will either be DE-000626 or DE-000631. This is dependent on the region.**

9 Installation and Operating Instructions

How to Mount this Product to Your Machine

The Trencher uses the quick-attach system for ease of installation. Therefore, if you know how to attach your loader bucket, attaching the Trencher should prove no problem. Remember to read all safety warnings, decals, and operating instructions before operating the Trencher. The following instructions will help you to mount your Trencher onto your machine.

- Digga Trenchers are designed for cutting narrow, straight trenches in the soil prior to laying electrical, telephone and cable lines, or water and gas pipes.
- The Digga Trencher attaches to the tool bar/quick-attach mechanism of your machine. Due to this arrangement, thorough knowledge of the machinery controls is necessary for machine operation. Read and understand your machine operator's manual for information regarding machine operation before attempting to use the Trencher.
- When a Trencher is purchased from Digga or a Digga dealer the gearbox and motor configuration is matched for suitability and compatibility to the flows and pressure of the original machine it was purchased for. For fitment of the Trencher to other machines, you must first contact your Digga dealer and receive written confirmation to ensure you do not incorrectly fit the Trencher to a machine with higher flows or pressure than what the Trencher was designed for.
- Refer to the serial tag for max flow and pressure ratings. Warranty will be voided, if the Trencher is fitted to an alternative machine without first receiving written confirmation from Digga or your Digga dealer.
- Check the work site and identify the extent of the work to be carried out and note any possible hazards or constraints such as underground cables and pipes etc. Dial your relevant authority to obtain underground hazard information before you commence trenching.
- Review the job at hand and determine the appropriate type of chain for the intended trenching conditions. For example, do not use the cup teeth chain in medium to hard conditions as Diggatac is the correct selection for these jobs.
- Remove the shipping banding from around the Trencher and Frame/Hitch.

WARNING

Do not lock the auxiliary hydraulics of your machine in the “ON” position. Failure to obey this warning could result in death or serious injury.

- Remove any attachments from the front of the parent machine.
- Check that all nuts and bolts are tightened on the frame or hitch and the frame or hitch is correctly mounted on the Trencher.
- Follow all the standard safety practices and the instructions for installing an attachment in your machine operator’s manual and install the Trencher onto your machine.
- Once the Trencher is connected to the frame or hitch, lower the unit to the ground and remove the key from the host machine.
- Relieve any pressure from the auxiliary hydraulic system and after making sure that there is no foreign matter on the hydraulic couplers, connect the supply and return couplers to the auxiliary hydraulic system of your machine.
- We recommend connecting the trencher on a bidirectional circuit, not a single acting hammer circuit. This will allow you to reverse the chain if it gets stuck.
- Make sure the couplers are fully connected and locked.
- Route the hoses in such a fashion as to avoid pinching or chafing.
- Check the chain teeth are not worn and ensure that all worn parts are replaced. Worn parts will become ineffective and will reduce the overall performance of the Trencher.
- The trencher is now ready for use.

DANGER

All the bystanders must be at a minimum of 6 meters (20 feet), while the chain of Trencher is moving. It is the responsibility of the operator to ensure all safety procedures are followed.

CAUTION

The Trencher is not a chain saw and must not be used above ground for cutting, shearing or any other use. It should be only used for the purpose it has been designed for.

9 Installation and Operating Instructions

NOTE

Read and understand the safety instructions before beginning any trencher mounting.
Ensure that the locking mechanism on your quick attach is engaged, therefore locking the attachment onto the machine.
If there is any portion of this manual that you do not understand, contact your Digga dealer or Digga Head Office, Australia.

Calculation of Trencher Chain Speed

Chain speed of Trencher can be calculated as:

- To calculate the chain speed in RPM, count the number of full revolutions the chain makes in a specific period of time. To do this, firstly ensure that the Trencher is disengaged and stationery. If the chain does not already have one coloured tooth, paint one in a bright colour to make it easily visible when the chain is rotating.
- Raise the Trencher so it is horizontal to the ground, with the bottom of the auger at approximately 200 mm (8") off the ground. Start the rotation of the chain and ensure the chain is rotating freely before increasing RPM.
- With the chain rotating, count the number of times the chain makes a full revolution in 60 seconds. Every time that the brightly coloured tooth passes the same point on the trencher is one full revolution. Be sure to do this from a safe working distance and making use of the correct PPE.
- Compare this value to the relevant trencher in the table showing Trencher chain speeds. This will give you a good idea, whether or not you are operating within the ideal limits for your trencher.
- Adjust the flow to the trencher or the RPM of the parent machine to either increase or decrease the chain speed to within the ideal limits of your trencher.
- Should you have a tachometer, it can be used to measure the shaft speed, once again this can be compared to the table .
- The required chain speed will be dependent on the type of soil and the conditions thereof being trenched, harder substances will require higher torques and thus lower speeds. Softer soils on the other hand can be trenched at higher speeds.

- Similarly the ground speed of the host machine will also be dependent on these factors.
- Operating the trencher at the maximum speed for prolonged periods of time or over the maximum speed will cause increased wear and eventual failure of the unit.

TRENCHER CHAIN SPEEDS TABLE

			G/Box Output Shaft RPM			Full Chain RPM			Motor						Flowrate required to achieve Chain Speed. (l/min)		
No.	Model	Gear Factor	Minimum	Preferred	Maximum	Minimum	Preferred	Maximum	Motor Size (ci)	Motor Type	Gearbox Ratio	Motor Speed (RPM- min.)	Motor Speed (RPM preferred)	Motor Speed (RPM max.)	Minimum	Preferred	Maximum
** 1	Bigfoot - 750 Boom	28	89	150	165	20	34	38	8.00	2K	3.48	309.72	522	574	41	68	75
2	Bigfoot - 900 Boom	28	89	150	165	17	28	31	8.00	2K	3.48	309.72	522	574	41	68	75
3	Hydrive - 900 boom	28	108	150	164	18	25	27	4.90	2K	5.77	623.16	866	946	50	70	76
4	Hydrive - 1,200 boom	28	108	150	174	15	21	25	4.90	2K	5.77	623.16	866	1004	50	70	81
5	Bigfoot XD - 900 boom	33	110	130	211	20	24	39	9.60	2K	3.48	382.80	452	734	60	71	116
6	Bigfoot XD - 1,200 boom	33	129	130	211	20	20	33	9.60	2K	3.48	448.92	452	734	71	71	116
7	Bigfoot XD HF - 1,200 boom	52	124	130	200	19	20	31	15.00	6K	3.48	431.52	452	696	106	111	171
8	Bigfoot XD HF - 1,500 boom	52	124	130	200	16	17	26	15.00	6K	3.48	431.52	452	696	106	111	171
9	Hydrive XD - 1,200 boom	33	138	130	211	19	18	29	9.60	2K	3.48	480.24	452	734	76	71	116
** 10	Mini Trencher - 750 Boom	21.5	89	150	213	20	34	38	6.2	2K	3.48	309.72	522	741	31	53	75
11	Mini Trencher - 900 Boom	21.5	89	150	213	17	28	31	6.2	2K	3.48	309.72	522	741	31	53	75

**** Mini Bigfoot & Bigfoot 750 Boom are Discountinued.**

NOTE

Never lift this product above the operator's eye level or to a height where visibility is obstructed, which ever is lower.

9 Installation and Operating Instructions

To Cut a Trench

- Ensure the foot of your trencher is set in the correct position for the depth you wish to achieve (for Bigfoot Trenchers only).
- For Bigfoot Trenchers purchased after August 2014 your trencher will be fitted with a Headstart crumber bar. The crumber is an essential component of the trencher and draws the spoil up from the bottom of the trench, onto the chain. The crumber ensures you achieve a clear, clean trench. The crumber can be removed, but the trencher will not be able to effectively remove all of the spoil without the crumber. The patented “Digga Headstart crumber” allows the operator to start the trench with the crumber in the locked down position.
- Ensure that the chain has the correct tension (for details see chain adjustment in the maintenance section of this manual).
- Engage the trencher slowly into the ground with a slight crowding forward so that the nose of the trencher engages first.
- Progressively crowd the trencher over and allow it to engage deeper into the ground. Do not attempt to reach your full depth immediately, as you will potentially damage the crumber and danger bar. While slowly reversing your machine, continue crowding the trencher forward until the foot of your trencher is flat to the ground. This process should be done over a 2-4 m (6'6" -13'2" feet) distance until you reach the desired depth and will be dependent on the type of material you are trenching into. It will take approximately 2m (6'6") of trenching before you can operate at the desired depth.

To Cut a Trench (Continued)

- Efficient trenching is a combination of power and speed. Once your trenching depth has been achieved, continue to reverse your machine ensuring you trench in a straight line whilst monitoring the chain speed. This can be done by continuously reversing the parent machine at a constant speed whilst maintaining a chain speed above the minimum.
- If using a Hydrive Trencher, ensure that both spoil augers are 20-50mm (0.75"-2") off the ground. If both spoil augers are touching the ground, it will prevent the trencher from running at full power and will reduce the trenching performance.
- If your trencher has the new Headstart crumber bar, you can start trenching with the crumber in the down position. Reverse the machine slowly from the moment you begin to trench. Never attempt to reach the desired depth without reversing.

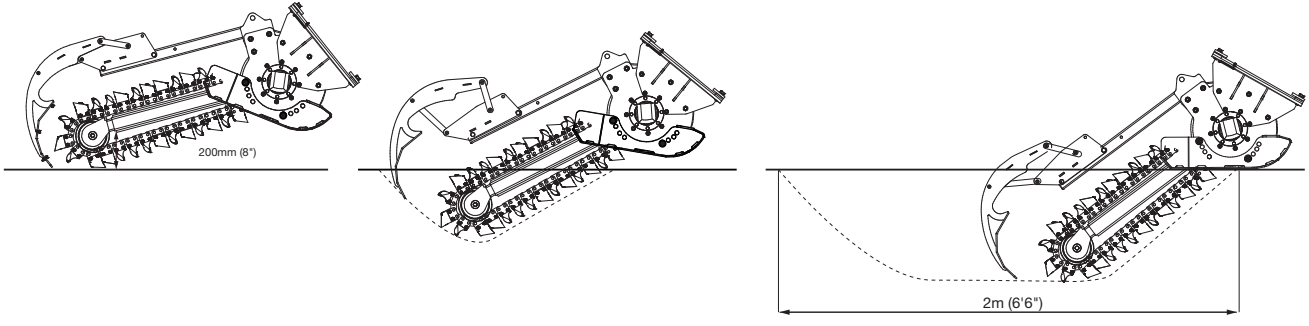

9 Installation and Operating Instructions

To Cut a Trench (Continued)

- Do not apply excessive downward pressure on the crumber bar while beginning a trench. This will cause the spring to over extend as it is going down the first part of the trench resulting in crumber failure and damage to the danger bar.
- The Trencher is designed to operate with the depth adjustable ‘foot’ just on the ground. Do not apply excessive pressure to the foot. Under no circumstances should the front of the machine be lifted off the ground by the Trencher.
- The trencher is designed to cut straight trenches, it cannot be used for cutting trenches around corners. However if desired a curved trench can be achieved by cutting in a slow wide arc.
- The parent machine is to be reversed when trenching. You cannot trench while driving forward.
- If the trencher stalls while digging, raise slightly and move forward to free the trencher, then continue. Do not continually stall the trencher and allow the trencher time to cut and clear spoil.
- Never use earth chains when digging in difficult hard ground conditions.
- Always check chain condition and ensure teeth & chain tension are tightened before use.
- Never continue to dig if the chain begins to jump due to incorrect style/type of teeth used in harder ground conditions.

⚠ CAUTION

Do not rapidly engage forward and reverse or on/off rotational movement to clear the Trencher, this action can cause the cavitation of the motor and void motor warranty.

Trenching Depth (Bigfoot Trencher)

To adjust the trench depth on your trencher, you will need to loosen and remove the two 5/8"(16mm) nuts and spring washers that hold the skid plate onto the trencher side plate. Then remove the skid plate and rotate it until the two fixed bolts line up with the holes for the trench depth that you require. See below the illustration and take note of nut positions to suit trench depths. Then reassemble the skid plate onto the side plate, check the star washers are still in good condition and tighten the nuts back up firmly using hand tools.

Depth Setting 1

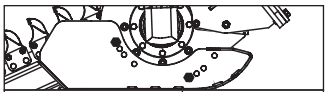

**BFT-750	450mm (18")
BFT-900	600mm (24")
BFTXD-900	450mm (18")
BFTXD-1200HF	600mm (24")
BFTXD-1500HF	750mm (30")

Depth Setting 2

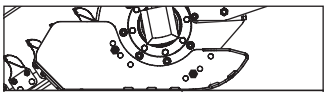

**BFT-750	600mm (24")
BFT-900	750mm (30")
BFTXD-900	600mm (24")
BFTXD-1200HF	800mm (32")
BFTXD-1500HF	1000mm (40")

Depth Setting 3

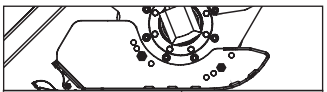

**BFT-750	750mm (30")
BFT-900	900mm (36")
BFTXD-900	750mm (30")
BFTXD-1200HF	1000mm (40")
BFTXD-1500HF	1250mm (50")

Depth Setting 4

N/A	N/A
N/A	N/A
BFTXD-900	900mm (36")
BFTXD-1200HF	1200mm (48")
BFTXD-1500HF	1500mm (60")

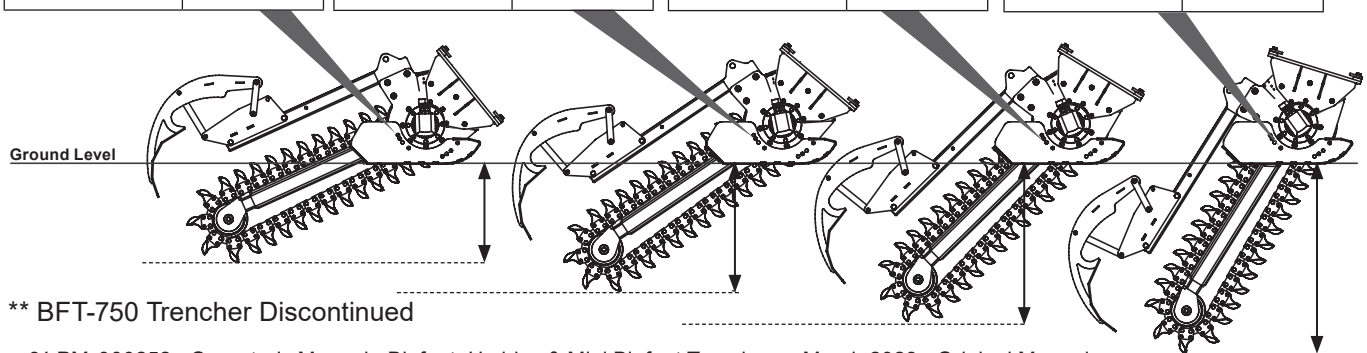

** BFT-750 Trencher Discontinued

Trenching Depth (Mini Bigfoot Trencher)

To adjust the trench depth on your trencher, you will need to loosen and remove the two 5/8" (15.9mm) nuts and spring washers that hold the skid plate onto the trencher side plate. Then remove the skid plate and rotate it until the two fixed bolts line up with the holes for the trench depth that you require. See below the illustration and take note of nut positions to suit trench depths. Then reassemble the skid plate onto the side plate, check the star washers are still in good condition and tighten the nuts back up firmly using hand tools.

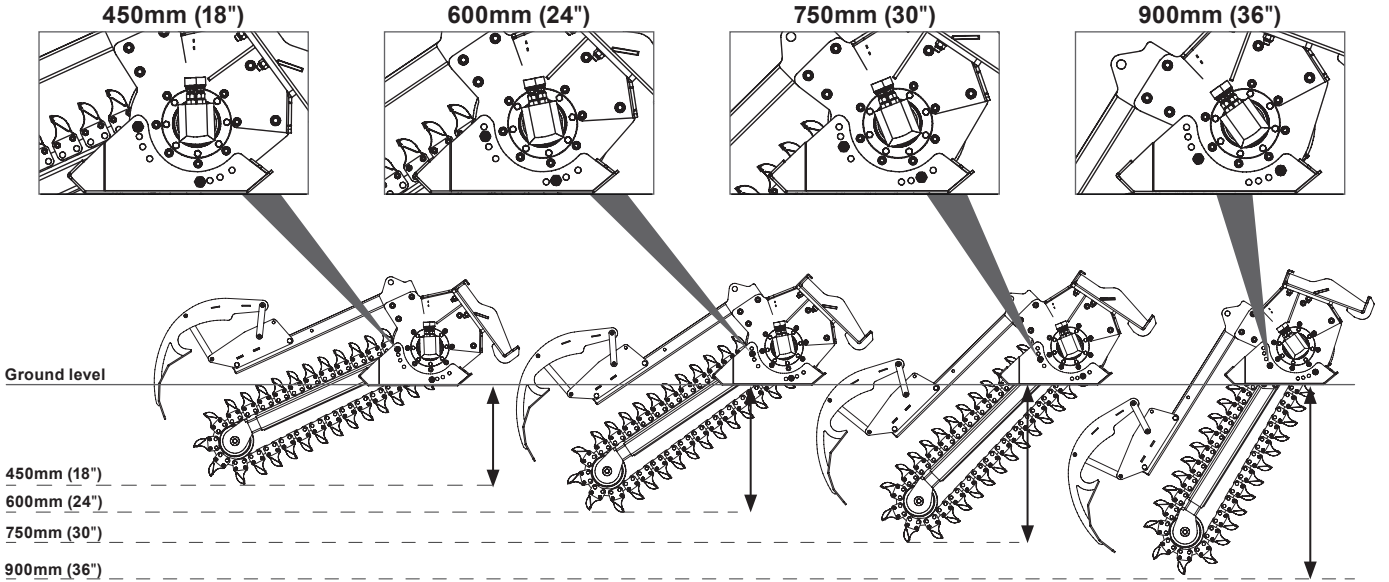

Maximum Dig Depth 900mm

9 Installation and Operating Instructions

Removal and/or Storage of Attachment

- Set the attachment on the ground and follow the standard shut down procedure in your parent machine operator's manual.
- With the loader OFF, disengage the attachment lock pins, release hydraulic pressure from the auxiliary hydraulic system and disconnect the hydraulic couplers from the loader.
- Fit the couplers into one another to prevent the ingress of foreign matter into the hydraulics system of the trencher.
- Disengage the machine's attachment locking pins. Start the machines engine and make sure that the lift arm is lowered and in contact with the loader frame.
- Roll the attachment mechanism forward and slowly back up until the attachment is free from the machine.
- Remove and store the attachment in a dry and protected place. Leaving the Digga Trencher outside will materially shorten its life.

When the Attachment is Not on a Parent Machine

It is the responsibility of the operator that safe systems of work are employed while handling the attachment. All due care and attention must be observed at all times in any method of moving, transporting or storing any such device when not attached to a parent machine. We recommend attachments are well secured when being moved or in transit and furthermore prior to moving, storing, loading/unloading or parking. It is suggested that the attachment is strapped/secured to a pallet or enclosed in a suitable container to minimise any movement or loss of the load during such activity. Follow all federal, state, and local regulations when transporting the unit on public roads. Use extra care when loading or unloading the machine on to a trailer or truck and disconnect hydraulic couplers during the transportation. No responsibility for loss or damage to persons or property in any regard can be attributed to Digga.

Before Each Use

- Make sure all the nuts and bolts are placed and properly tightened.
- Make sure that all other fasteners are in place and are performing their specified function.
- Make sure that all hydraulic fittings are tightened and there are no leaks in any fittings or hoses.
- Make sure that all safety signs are in place, and are clean& legible.
- Check Gearbox and Hydraulic motor for any oil leaks.
- Ensure any damage or excessively worn parts are replaced.
- Check chain tension.
- Check crumber has not been damaged from last use and crumber is not contacting the chain.
- Check slide frame is in correct position (ideally trencher should be centred on host machine).
- Check slide frame secure clamping bolts are tight.
- Check nose roller is turning (do this by rotating the chain slowly).
- Always wear safety goggles or glasses when inspecting equipment.

WARNING

Escaping fluid under pressure as low as 100 PSI can have sufficient force to penetrate the skin up to 4" (100mm) away causing serious personal injury. Fluid escaping from a very small hole can be almost invisible. Use a piece of cardboard or wood, rather than hands to search for suspected leaks (A). Keep unprotected body parts, such as face, eyes, and arms as far away as possible from a suspected leak and use heavy duty PVC protective gloves. Flesh injected with hydraulic fluid may develop gangrene or other permanent disabilities.

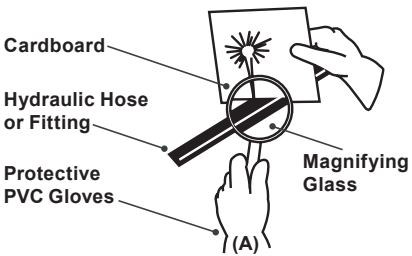

WARNING

Always wear the correct PPE, when operating or performing maintenance on this attachment. If a hydraulic fluid injection injury occurs, seek emergency medical attention immediately. Explain to medical staff that the injury is the result of pressurised fluid injection. Remember even if the point of entry appears as a minor pin hole, this potentially could be a major injury, especially if not treated in time.

10 Maintenance

Nose Roller Bearing Replacement

- To replace the nose roller bearing, firstly remove the circlip using a pair of straight circlip pliers **(B)**.
- Use a press to push the bearing out ensuring the pipe underneath is larger than the bearing **(C)**.
- When pressing the new bearing in, ensure the drift used is of the correct size. For example, the drift must sit against the outside shell of the bearing and does not damage the ring that holds the bearing together. Ensure that the bearing is sitting against the lip on the opposite side of the nose roller and replace circlip **(D)**.

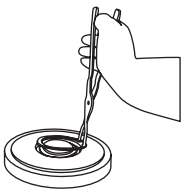

(B)

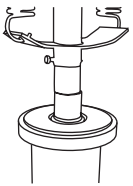

(C)

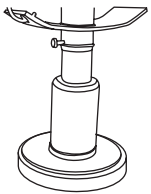

(D)

NOTE

A hammer is not recommended for this procedure.

CAUTION

Always ensure that the hydraulic motor is primed with hydraulic fluid prior to use following any repairs to the Trencher or the parent machine. Do not allow the Trencher to run without oil at any time.

NOTE

The illustrations and data used in this manual were current (according to the information available to us) at the time of printing; however, Digga reserves the right to redesign and change the attachment as may be necessary without notification.

Scraper Shoe Replacement

- The scraper shoe is designed to be interchangeable,if it gets damaged or a different chain width is fitted to the Trencher. It can be replaced by removing the three nyloc nuts and bolts holding it in place.
- Replace the shoe and tighten the bolts using hand tools **(E)**.

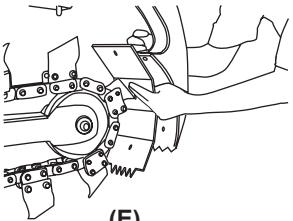

(E)

Sprocket Replacement

- Firstly remove the 1/2" (12.7mm) bolt holding the auger and remove the auger. Remove the chain from around the sprocket and use a 3/16" (4.8mm) Allen key to loosen the two grub screws in the retaining collar and slide collar off the shaft **(F)**.
- Slide the sprocket off the shaft and replace with a new sprocket. It is recommended to apply anti-seize to shaft before the replacement of sprocket **(G)**.

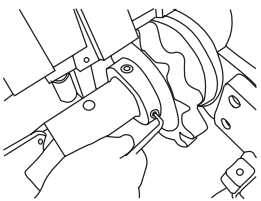

(F)

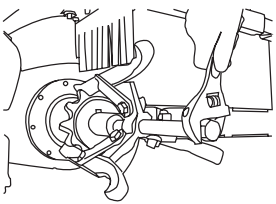

(G)

NOTE

If the Sprocket can not be removed by tapping with a copper hammer, then a puller with the aid of penetrating release lubricant may have to be used.

10 Maintenance

Hydraulic Hose Connection

- The Trencher chain must rotate in an anti-clockwise direction (when viewed from the motor side of the Trencher).
- The supply line from the parent machine must be connected to the ‘A’ port on the Trencher motor **(H)**.

Boom Adjustment

- For boom adjustment, use the supplied spanner to wind adjuster nut clockwise for loosening and anti-clockwise for tightening **(I)**.

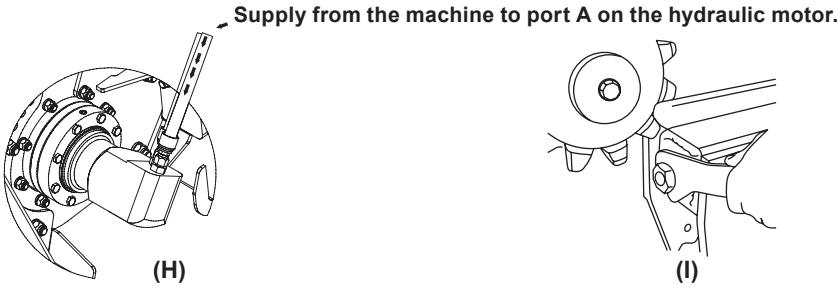

⚠ CAUTION

Shut down Host machine & Trencher and relieve hydraulic pressure on the parent machine before any adjustments are made.

NOTE

Make sure all gear oil is drained before removing the seal.

Seal Replacement

- Before the seal can be replaced remove retaining collar and sprocket as shown in sprocket replacement. Then remove the key and seal protector. Use a pin-punch or round pointed awl and tap gently to pierce through the seal face and then lever out the seal **(J)**. Inspect the inside of the housing for damage and if damaged or burred, clean up with emery cloth.
- Before the seal can be replaced run some grease around the inside lip of the seal for lubrication to the shaft. Ensure there are no burrs on the shaft between the end of the shaft and the end of the housing. File if necessary, and run a small bead of Loctite 243 or equivalent, around the outside of the seal **(K)**.
- Proceed to fit the seal by using a large punch/sleeve/collar and gently tap the seal into place and ensure the seal is installed in evenly **(L)**. This is very important, as any misalignment could cause damage to the seal and promote a leak. The seal must be flush with the end of the housing. Replace the seal protector, key, sprocket and retaining collar. Refill the planetary with gear oil, the gearbox oil capacity is engraved on to the serial tag located on the Trencher.

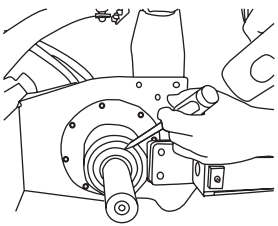

(J)

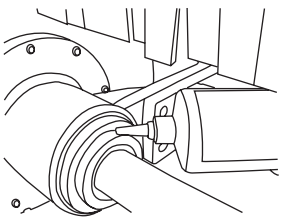

(K)

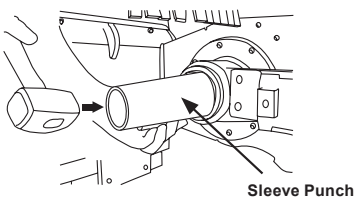

(L)

10 Maintenance

Auger Adjustment

- The spoil removal auger has two settings. When a 100mm (4"), 150mm (6"), or 200mm (8") chain is being used the auger must set-up closer to the chain. Use the bolt hole which is closer to the auger flights. The auger flights should be at least 100mm (4") from the chain but that is dependant on chain width and limited adjustment positions, available for the spoil auger **(M)**.
- When a 250mm or 300mm (10" or 12") chain is being used, it is important that the Auger is set-up further away from the chain **(A)**. Use the bolt hole which is further away from the auger flights **(N)**.

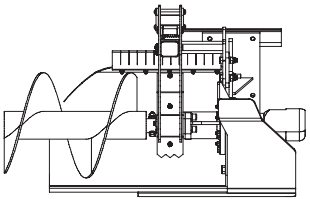

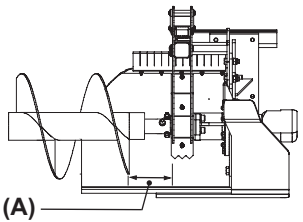

Chain Adjustment

- To either adjust chain or remove chain – remove the 1/2" (12.7mm) bolt holding spanner to outer boom.
- Use spanner supplied to wind adjuster nut clockwise for loosening, anti-clockwise for tightening **(O)**.
- To achieve the correct chain tension: Adjust the tension on the lower chain section at the midway point between the sprockets to allow 20mm-30mm (0.79" or 1.9") of vertical movement **(P)**.

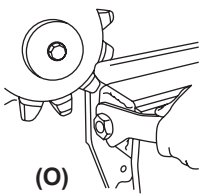

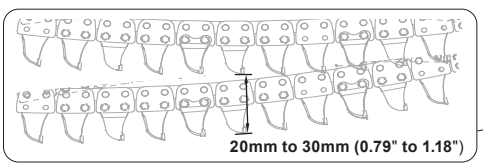

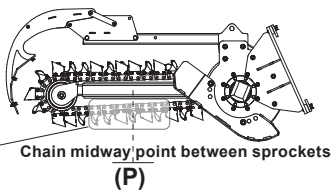

CHAIN PITCH	CHAIN WIDTH	MBT-900 MINI TRENCHER & BFT-900 (With 32 Stations)	BFTXD-900 (With 30 Stations)	BFTXD-1200 (With 36 Stations)	BFTXD-1200HF (With 36 Stations)
1.625" (41.28mm)	4" (100mm)	•	N/A	N/A	N/A
	6" (150mm)	•	N/A	N/A	N/A
	8" (200mm)	•	N/A	N/A	N/A
	9" (250mm)	N/A	N/A	N/A	N/A
	12" (300mm)	N/A	N/A	N/A	N/A
2"(50.8mm)	6" (150mm)	N/A	•	•	•
	8" (200mm)	N/A	•	•	•
	9" (250mm)	N/A	•	•	•
	12" (300mm)	N/A	•	•	•
	14" (350mm)	N/A	N/A	N/A	N/A

CHAIN PITCH	CHAIN WIDTH	BFTXD-1500HF (With 43 Stations)	HDT-900 (With 36 Stations)	HDT-1200 (With 42 Stations)	HDTXD-1200 (With 40 Stations)
1.625" (41.28mm)	4" (100mm)	N/A	•	•	N/A
	6" (150mm)	N/A	•	•	N/A
	8" (200mm)	N/A	•	•	N/A
	9" (250mm)	N/A	•	•	N/A
	12" (300mm)	N/A	•	•	N/A
2"(50.8mm)	6" (150mm)	•	N/A	N/A	•
	8" (200mm)	•	N/A	N/A	•
	9" (250mm)	•	N/A	N/A	•
	12" (300mm)	•	N/A	N/A	•
	14" (350mm)	•	N/A	N/A	•

Note
• Denotes Available

10 Maintenance

Type of Digging Conditions

- Wear in the cup teeth on the tip and side bulge may vary in amount and wear patterns change with different digging conditions. Rocks will take the points off faster than the sides.
- Sand stone or highly abrasive materials will wear out the side bulges faster and rock will be the most severe. Sharp teeth are important to achieve good performance.
- When the teeth wear out, they drop the production rate sharply and also increase wear and tear on other components **(Q)**.
- Normal replacement should be made between 30% and 60% reduction in performance.
- Diggatac teeth and chains will greatly improve the cost/benefits in severe materials. These special options are built up from hard rock mining machine components and utilise hard carbide tipped teeth.

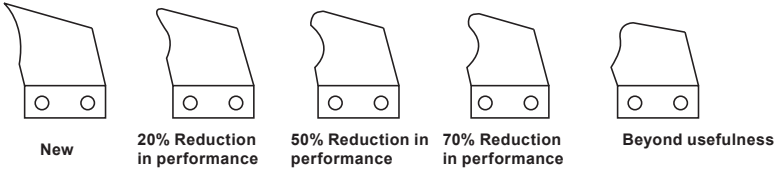

(Q)

NOTE

For further information on spare parts please contact one of the Digga sales office or your closest authorised Digga dealer.

Planetary Gear Oil Change

The Trencher planetary unit is a sealed unit. If any signs of oil leaks are found, please contact your nearest Digga dealer before carrying out any repairs as there can be other causes for seal leaks. The planetary drive unit in the Trencher uses **Extreme Pressure Gear Oil - ISO EP320 (mineral oil)** for lubrication of gears and bearings. The temperature rating of this oil will be dependant on the region where the Trencher is scheduled to be used. The onus is on the operator to ensure that the temperature range of the oil being used covers the range of ambient temperatures that the trencher could be operating in. The gearbox oil temperature graph on page 41 shows the operating temperature range of the gearbox oil installed at the factory.

OIL CHANGE SCHEDULE	MODERATE OPERATING CONDITIONS	SEVERE OPERATING CONDITIONS
First Oil change.	Within 3 months or initial 50 hours of use.	Within the first 30 hours of use.
Second oil change plus subsequent oil changes.	After every 500 hours of use or 12 months of use.	After 300 hours of use thereafter (Drive requires a major strip down, inspection and rebuild).

NOTE

***Severe/extreme operating conditions include but not limited to ambient temperature conditions of +40°C (104°F) or below 0°C (32°F), working in hard ground, extended and continuous hours of operation. The gearbox oil capacity is engraved onto the serial tag located on the Trencher.**

TRENCHER	OIL CAPACITY IN LITRES	RECOMMENDED OIL FOR GEAR BOX
Mini Bigfoot	0.72	ISO EP320 Mineral
Bigfoot	0.72	ISO EP320 Mineral
Bigfoot XD	0.72	ISO EP320 Mineral
Hydrive	0.72	ISO EP320 Mineral
Hydrive XD	0.72	ISO EP320 Mineral

Following precautions should be considered:

- Continuous operating temperature must not exceed 80°C (176°F).
- During extended stationary periods (one month or more), the unit should be run monthly to immerse all internals in oil, thereby preventing corrosion.
- Gear oil should be changed when hot, to prevent a build up of sludge deposits. Flush interior of unit with fluid recommended by oil companies.
- Check for leaks regularly and if an oil leak is detected contact your nearest Digga dealer for remedy instructions.
- Use only prescribed oil when refilling and do not mix oil of different viscosity, not even those of the same brand. It is not recommended to mix the mineral and synthetic oils.
- Contact your nearest Digga dealer for gear oil change procedure.

Minimum and maximum gear oil operating temperatures for the following gearboxes:
Mini Bigfoot / Bigfoot / Bigfoot XD / Hydrive / Hydrive XD

Mini Bigfoot/Bigfoot/Bigfoot XD/Hydrive/Hydrive XD-ISO EP320 (mineral oil)

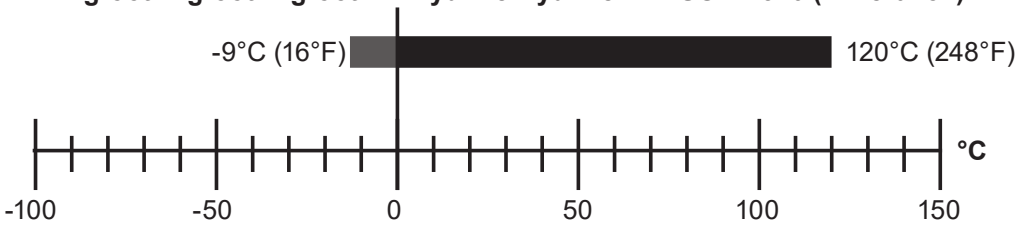

NOTE

Digga specified ISO EP320 mineral gear oil is specifically for “Extreme Pressure” industrial gearboxes. Oil capacity charts are estimated for a gearbox being filled the first time. When changing the oil, not all oil will drain out, there will always be some residual oil left in the gearbox. Follow the procedure to fill the gearbox, using the oil capacity charts as a guide only.

10 Maintenance

Fitting a Trencher Chain - MINI BIGFOOT/BIGFOOT/BIGFOOT XD

- Start with the Trencher securely attached to a lifting device or machine, ensure the adjustable boom is fully retracted.
- Place Trencher on the ground, position chain in front of the nose roller with cutting edge of the tooth facing away from the Trencher **(R)**.
- Lift chain onto nose roller - a suitable lifting device may need to be used for the larger heavier chains **(S)**.
- Slide the chain along the boom and over the drive sprocket **(T)**.
- Raise the Trencher - ensuring the Trencher is supported and cannot fall whilst raised from the ground. Bring both ends of the chain under the boom **(U)**.
- Bring both ends of the chain together and insert the joining pin. The joining pin must be inserted from the correct side, which is identified by looking at the head of the other link pins and matching it to the same side **(V)**.
- Tap the joining pin fully home using a soft head mallet **(W)** and insert the split pin and bend to secure **(X)**.
- Adjust the chain tension and replace spanner to side of boom **(Y)**.

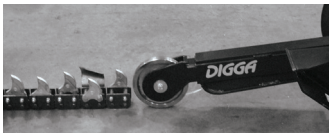

(R)

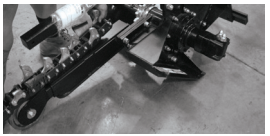
(S)

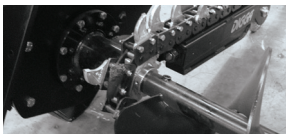
(T)

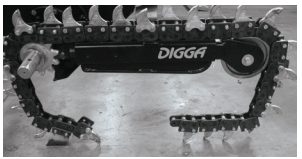

(U)

(V)

(W)

(X)

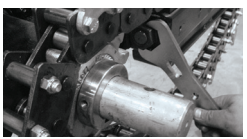
(Y)

CAUTION

All work safe practices and procedures must be adhered and appropriate PPE must be worn.

Fitting a Trencher Chain - HYDRIVE / HYDRIVE XD

- Start with the Trencher securely attached to a lifting device or machine, ensure the adjustable boom is fully retracted.
- Place Trencher on the ground, position chain in front of the nose roller with cutting edge of the tooth facing away from the Trencher **(AA)**.
- Lift chain onto nose roller - a suitable lifting device may need to be used for the larger heavier chains **(BB)**.
- Slide the chain along the boom and over the drive sprocket and down past the idle sprocket **(CC)**.
- Raise the Trencher - ensuring the Trencher is supported and cannot fall whilst raised from the ground. Bring both ends of the chain under the boom **(DD)**.
- Bring both ends of the chain together and insert the joining pin. The joining pin must be inserted from the correct side, which is identified by looking at the head of the other link pins and matching it to the same side **(EE)**.
- Tap the joining pin fully home using a soft head mallet **(FF)** and insert the split pin and bend to secure **(GG)**.
- Adjust the chain tension and replace spanner to side of boom **(HH)**.

(AA)

(BB)

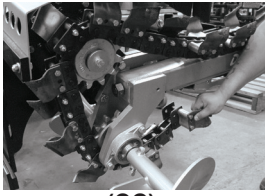

(CC)

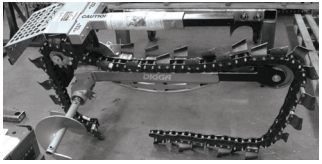

(DD)

(EE)

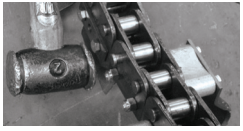

(FF)

(GG)

(HH)

11 Troubleshooting

CHAIN		
Trouble	Possible Cause	Remedy
Chain does not turn.	Quick coupler not completely engaged.	Check and complete engagement.
	Quick coupler failure.	Replace faulty coupler.
	An obstruction in one of the hose.	Remove obstruction.
	Hydraulic motor failure.	Repair or replace hydraulic motor by contacting your Digga dealer.
	Chain drive failure.	Check & repair chain drive or contact your Digga dealer.
	Nose roller bearing failed.	Replace bearing.
	Digging chain too tight.	Loosen chain tension.
	Sand or spoil material build up in tooth root of sprocket.	Raise out of ditch, reverse chain & run to clear build up or loosen chain tension.

DIGGING		
Trouble	Possible Cause	Remedy
Does not dig fast enough.	Teeth are worn.	Replace teeth, if necessary.
	Relief valve set below specifications.	Test and reset, if necessary.
	Quick coupler or hose restriction.	Inspect and repair, as needed.
	Hydraulic system too hot.	Shut down and cool.
	Cutting a ditch size beyond the machine's capability.	**Remember:** Your Trencher only has the horsepower transmitted through the hydraulic hoses, not the full horsepower of the engine.
	Auger/s running on the ground.	Raise Trencher - Keep auger/s off ground.
	Chain too tight.	Adjust to proper tension.

BOOM, DANGER BAR, FOLDBACK CRUMBER BAR		
Trouble	Possible Cause	Remedy
Trenching boom or Danger bar or Foldback crumber bar is bent.	Abuse.	Replace.

HYDRAULIC OIL		
Trouble	Possible Cause	Remedy
Hydraulic oil overheating.	Relief valve set too low on parent machine.	Test & set as needed.
	Restriction in quick release coupler or hose.	Inspect and repair as needed.
	Hydraulic motor or hoses not size balanced to parent machine.	Check flows and recommendations and change if necessary (contact Digga Dealer).
	Parent machine not equipped with oil cooler or sufficient sump capacity.	Stop and allow to cool naturally when it gets hot.

12 Spare Parts

For further information on spare parts, please contact one of the Digga sales offices shown below, or contact your local authorised Digga dealer.

DIGGA INTERNATIONAL SALES OFFICES

ASIA PACIFIC

DIGGA HEAD OFFICE - BRISBANE
4 Octal St, Yatala QLD 4207
Phone: +61 7 3807 3330
Email: info@digga.com

DIGGA NEW SOUTH WALES
19 Mckay Close,
Wetherill Park, NSW 2164
Phone: 1300 2 DIGGA
Email: nsw@digga.com

DIGGA VICTORIA
17-21 Babbage Dr,
Dandenong, VIC 3175
Phone: 1300 2 DIGGA
Email: vic@digga.com

Web: www.digga.com

NORTH AMERICA

DIGGA NORTH AMERICA
2325 Industrial Parkway SW
Dyersville IA 52040
Phone: + 1 563 875 7915
Email: infous@digga.com

Web: www.diggausa.com

EUROPE

DIGGA EUROPE
Unit 6, Smitham Bridge Road
Hungerford Trading Estate,
Hungerford, Berkshire RG17 0QU
England, United Kingdom
Phone: +44 (0) 1488 688 550
Email: infouk@digga.com

Web: www.diggaeurope.com

13 Notes: Operator’s Manual

Warranty Statement

Motor - Limited warranty up to 2 years, subject to manufacturers inspection.

Gearbox - Warranty up to 3 years, subject to manufacturers inspection.

All new Digga products are warranted to be free from defects in material and workmanship, for a period of twelve (12) months from date of original purchase, which may cause failure under normal usage and service when used for the purpose intended. The warranty does not extend to transportation cost of parts nor does it cover consequential loss, damage to Hydraulic Hoses or ground-engaging parts such as Sprockets, Digging Chain, Bearings, and Teeth.

Digga equipment must be operated in accordance with the recommended procedures and within the ranges as specified both on the unit and contained in the operating manual.

The warranty will be considered void if the product or any part of the product is modified or repaired in any way not expressly authorized by Digga, or if closed components are disassembled prior to return. Closed components include, but are not limited to: gearboxes, hydraulic pumps, motors, cylinders and actuators. Any claims under this warranty must be made within fourteen (14) days after the buyer learns of the facts upon which claim is based. All claims not made in writing and not received by Digga within the time specified above may be deemed waived. Digga will not be responsible for or accept any charges for work carried out by any repairers, or for charges for any spare parts fitted to any Digga products without written approval from Digga.

Damage or failure through operator abuse or negligence voids warranty.

This warranty is in lieu of all other warranties expressed or implied and there are no warranties or merchant ability or of fitness for a particular purpose. In no event shall Digga be liable for consequential or special damages. Digga's liability for any and all losses and damages to buyer resulting from any cause whatsoever, including Digga negligence irrespective of whether such defects are discoverable or latent, shall in no event exceed the purchase price of the particular parts, with respect to which losses or damages are claimed, or, at the discretion of Digga the repair or replacement of defective or damaged parts. Any goods returned to Digga by the customer under warranty or repair must have all freight charges prepaid for on the customer's Account.

If the first oil change and subsequent oil changes are found to have not been performed at the correct specified time, and results in premature gearbox failure during the warranty period. The warranty will be voided.

DIGGA